> Vertical – type SGW(S)

capacity 200÷500 l		unit	SGW(S) 200	SGW(S) 250	SGW(S) 300	SGW(S) 400	SGW(S) 500
nominal capacity		l	212	263	277	404	480
actual capacity [3]		l	199	250	264	389	462
maximum working pressure		MPa	1.0	1.0	1.0	1.0	1.0
maximum working pressure the spiral coil		MPa	1.6	1.6	1.6	1.6	1.6
maximum tank operating temperature		°C	100	100	100	100	100
maximum coil operating temperature		°C	110	110	110	110	110
coil surface		m²	1.4	1.4	1.4	1.8	2.0
coil power (70/10/45°C)		kW	33.6	33.6	33.6	43	48
heating capacity		l/h	800	800	800	1030	1150
coil power (80/10/45°C)		kW	44.8	44.8	44.8	57.6	64
heating capacity		l/h	1070	1070	1070	1380	1530
demand for heating water from CH boiler		m³/h	2.7	3.0	3.0	3.0	3.0
magnesium anode	upper bottom plug 5/4" [4]	mm	38x400	38x400	38x400	38x400	38x600
	insp. hole, screw M8	mm	38x200	38x200	38x200	38x200	38x200
h1 – cold water inflow – Ø 1"		mm	210	210	210	240	240
h2 – CH water outflow – Ø 1 "		mm	290	285	290	320	320
h3 – sensor cover – Ø 3/8"		mm	435	440	435	570	530
h4 – circulation – Ø 3/4"		mm	680	600	650	770	850
h5 – CH hot water inflow – Ø 1"		mm	790	755	750	870	970
h6 – domestic hot water outflow – Ø 1"		mm	860	1085	1135	1420	1650
L – height		mm	1100	1300	1360	1660	1890
D – external diameter		mm	670	670	670	700	700
net weight		kg	84	108	122	147	195

In all standing exchangers (from 200 to 1500 l), thermometer, sleeve 6/4" and inspection hole are moved 180° versus the axis of other sleeves.

- > EXTRA GLASS ceramic enamel + magnesium anode.
- > Insulation – polyurethane or polystyrene foam.
- > Possibility of installation of electrical set.
- > Helical coil with large surface area.

diagram of an exchanger 200 l

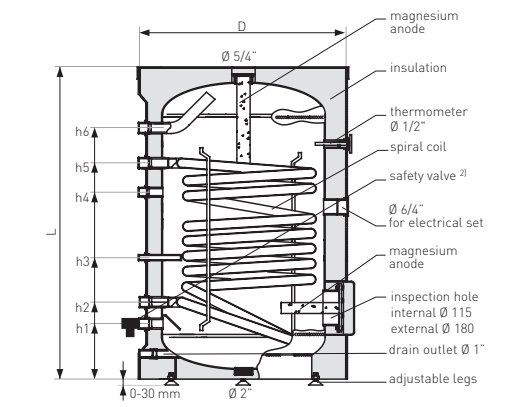

fig. 9

diagram of an exchanger 250÷500 l

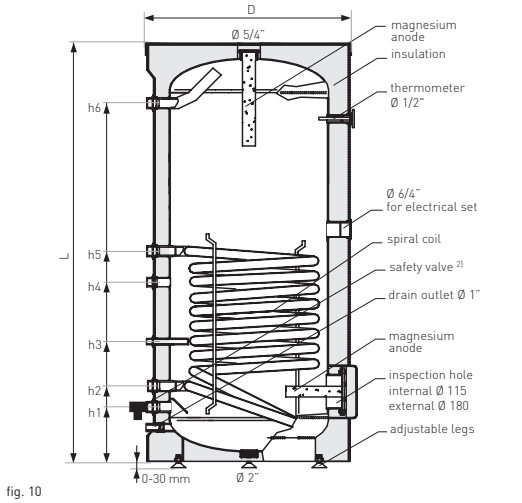

fig. 10

capacity 720÷1500 l		unit	SGW(S) 720	SGW(S) 1000	SGW(S) 1500
nominal capacity		l	712	1028	1456
actual capacity [3]		l	694	1005	1433
maximum working pressure		MPa	1.0	1.0	1.0
maximum working pressure the spiral coil		MPa	1.6	1.6	1.6
maximum tank operating temperature		°C	100	100	100
maximum coil operating temperature		°C	110	110	110
coil surface		m²	2.4	2.7	2.7
coil power (70/10/45°C)		kW	57.6	64.8	64.8
heating capacity		l/h	1380	1580	1580
coil power (80/10/45°C)		kW	76.8	86.4	86.4
heating capacity		l/h	1840	2110	2110
demand for heating water from CH boiler		m³/h	4.0	4.5	4.5
magnesium anode	upper bottom plug 2"	mm	38x600	38x600	38x600
	insp. hole, screw M8	mm	38x200	38x400	38x400
h1 – cold water inflow – Ø 1"		mm	350	370	370
h2 – CH water outflow – Ø 1"		mm	430	450	450
h3 – sensor cover – Ø 3/8"		mm	650	600	600
h4 – circulation – Ø 3/4"		mm	910	750	750
h5 – CH hot water inflow – Ø 1"		mm	1030	1000	1000
h6 – domestic hot water outflow – Ø 1"		mm	1770	1590	2270
L – height		mm	2050/2080 [5]	1960/1990 [5]	2650/2680 [5]
d – internal diameter		mm	700	900	900
D – external diameter		mm	855/900 [5]	1055/1100 [5]	1055/1100 [5]
net weight		kg	260	415	540

diagram of an exchanger 720÷1500 l

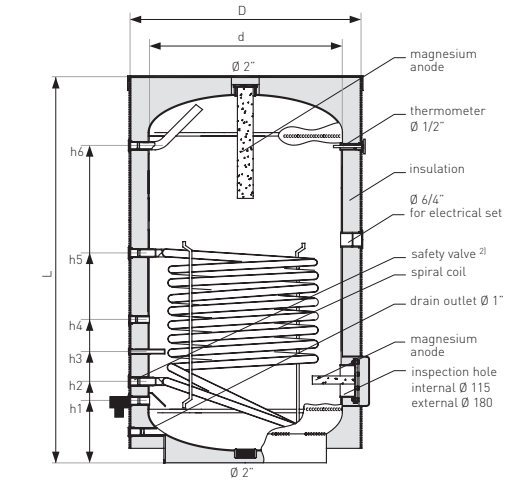

fig. 11

[2] Not included in the basic price.
[3] Tank volume without coils.
[4] Since 1 August 2013 the magnesium anode plug has had a size of 5/4".
Before that date the magnesium anode plug had a size of 2".
[5] In a detachable soft polyurethane foam 100 mm.